LAMPIRAN 1

KUESIONER PENGARUH *PERCEIVED VALUE* DAN *FREE MENTALITY* TERHADAP *WILLINGNESS TO PAY* MELALUI *ATTITUDE TOWARD PAYING* PADA LAYANAN VIDEO STREAMING NETFLIX

Responden yang terhormat,

Saya Bayu Ajie Wichaksono mahasiswa Program Studi Manajemen, Fakultas Ekonomi, Universitas Negeri Jakarta, memohon kesediaan Anda untuk berpartisipasi dalam penelitian saya. Untuk itu, saya mengharapkan kerjasama Anda untuk memberikan jawaban atas pertanyaan-pertanyaan di dalam kuesioner ini. Informasi yang diperoleh nantinya akan diolah dan dipergunakan semata-mata hanya untuk kepentingan akademis.

I. Screening Test:

Apakah Anda sudah pernah menggunakan layanan video streaming Netflix?

( ) Ya, Pernah (Lanjutkan ke pertanyaan selanjutnya).

( ) Tidak Pernah (Stop sampai disini, terimakasih).

Apakah Anda melakukan pembayaran pada layanan video streaming Netflix?

( ) Ya (Lanjutkan ke pertanyaan selanjutnya).

( ) Tidak Pernah (Stop sampai disini, terimakasih).

II. Petunjuk Pengisian:

Isilah pertanyaan-pertanyaan di bawah ini sesuai dengan yang anda rasakan. Tidak ada jawaban yang benar dan salah. Setiap responden hanya di beri kesempatan untuk memilih 1 (satu) jawaban, dengan keterangan sbb:

STS = Sangat Tidak Setuju
TS = Tidak Setuju
SeTS = Sedikit Tidak Setuju
SeS = Sedikit Setuju
S = Setuju
SS = Sangat Setuju

UNIVERSITAS NEGERI JAKARTA

PERTANYAAN KUESIONER

No.	Pertanyaan	STS	TS	SeTS	SeS	S	SS
	Attitude toward Paying						
1	Berlangganan Layanan video streaming untuk menonton film atau video secara *online* merupakan ide yang baik.						
2	Berlangganan Layanan video streaming untuk menonton film atau video secara *online* merupakan ide yang bodoh.						
3	Berlangganan Layanan video streaming untuk menonton film atau video secara online merupakan sebuah hal yang seharusnya dilakukan.						
4	Berlangganan Layanan video streaming berguna bagi saya.						
5	Film yang ada di Layanan video streaming menarik perhatian saya.						
	Perceived Value						
6	Berlangganan Layanan video streaming bisa memberikan kesenangan yang lebih tinggi.						
7	Saya dapat mengakses film yang saya suka dengan lebih cepat dan nyama ketika saya berlangganan Layanan video streaming.						
8	Saya dapat menemukan berbagai macam film ketika saya berlangganan Layanan video streaming.						
9	Berlangganan Layanan video streaming memungkinkan saya dapat melakukan kustomisasi untuk film yang ingin saya tonton.						
10	Saya tidak harus menyimpan dan menata CD atau DVD fisik ketika saya berlangganan Layanan video streaming.						
11	Secara umum, saya merasa bahwa langganan berbayar Layanan video streaming merupaka sebuah keuntungan.						
	Free Mentality						

12	Semua film yang tersedia pada Layanan video streaming seharusnya gratis.						
13	Menyediakan film gratis seharusnya menjadi fungsi dari layanan Layanan video streaming.						
14	Secara umum, Layanan video streaming harusnya tidak berbayar.						
Willingness to Pay							
15	Saya mau untuk membayar layanan berlangganan Layanan video streaming dalam waktu dekat.						
16	Saya akan tetap menggunakan layanan Layanan video streaming dalam waktu dekat.						
17	Saya berniat untuk menggunakan layanan Layanan video streaming dalam waktu dekat.						
18	Saya akan terus berlangganan Layanan video streaming walaupun harganya naik.						
19	Saya akan secara sukarela membayar lebih untuk layanan berlangganan Layanan video streaming.						

III. Identitas Responden

Jenis Kelamin : (a) Laki –laki (b) Perempuan

Usia : (a) ≤ 20 Tahun (c) 26 – 30 Tahun (e) ≥ 36 Tahun

(b) 21 – 25 Tahun (d) 31 – 35 Tahun

Pekerjaan : (a) Pelajar (c) PNS / BUMN (e) Lainnya

(b) Mahasiswa (d) Wiraswasta

Video Streaming : (a) Netflix (c) Amazon (e) Lainnya

(b) Hooq (d) Iflix

Lama Penggunaan: (a) < 6 bulan (c) > 12 bulan

(b) 6 – 12 bulan

Pengeluaran : (a) ≤ Rp. 999.999

(b) Rp. 1.000.000 – Rp. 2.999.999

(c) Rp. 3.000.000 – Rp. 4.999.999

(d) Rp. 5.000.000 – Rp. 6.999.999

(e) ≥ Rp. 7.000.000

LAMPIRAN 2

Exploratory Factor Analysis

1. Variabel *Perceived Value*

KMO and Bartlett's Test

Kaiser-Meyer-Olkin Measure of Sampling Adequacy.		,918
Bartlett's Test of Sphericity	Approx. Chi-Square	772,220
	df	15
	Sig.	,000

Communalities

	Initial	Extraction
PV01	1,000	,735
PV02	1,000	,668
PV03	1,000	,707
PV04	1,000	,720
PV05	1,000	,632
PV06	1,000	,790

Extraction Method: Principal Component Analysis.

Total Variance Explained

Component	Initial Eigenvalues			Extraction Sums of Squared Loadings		
	Total	% of Variance	Cumulative %	Total	% of Variance	Cumulative %
1	4,252	70,860	70,860	4,252	70,860	70,860
2	,487	8,124	78,984			
3	,381	6,350	85,333			
4	,337	5,621	90,954			
5	,290	4,834	95,788			
6	,253	4,212	100,000			

Extraction Method: Principal Component Analysis.

Component Matrix[a]

	Component
	1
PV01	,857
PV02	,817
PV03	,841
PV04	,848
PV05	,795
PV06	,889

Extraction Method:
Principal Component
Analysis.
a. 1 components
extracted.

2. Variabel *Free Mentality*

KMO and Bartlett's Test

Kaiser-Meyer-Olkin Measure of Sampling Adequacy.		,708
Bartlett's Test of Sphericity	Approx. Chi-Square	225,320
	df	3
	Sig.	,000

Communalities

	Initial	Extraction
FM01	1,000	,796
FM02	1,000	,711
FM03	1,000	,726

Extraction Method: Principal
Component Analysis.

Total Variance Explained

Component	Initial Eigenvalues			Extraction Sums of Squared Loadings		
	Total	% of Variance	Cumulative %	Total	% of Variance	Cumulative %
1	2,232	74,411	74,411	2,232	74,411	74,411
2	,451	15,021	89,432			
3	,317	10,568	100,000			

Extraction Method: Principal Component Analysis.

Component Matrix[a]

	Component
	1
FM01	,892
FM02	,843
FM03	,852

Extraction Method:
Principal Component
Analysis.
a. 1 components
extracted.

3. Variabel *Attitude Towards Paying*

KMO and Bartlett's Test

Kaiser-Meyer-Olkin Measure of Sampling Adequacy.		,842
Bartlett's Test of Sphericity	Approx. Chi-Square	359,855
	df	10
	Sig.	,000

Communalities

	Initial	Extraction
ATP01	1,000	,767
ATP02	1,000	,633
ATP03	1,000	,522
ATP04	1,000	,488
ATP05	1,000	,599

Extraction Method: Principal Component Analysis.

Total Variance Explained

Component	Initial Eigenvalues			Extraction Sums of Squared Loadings		
	Total	% of Variance	Cumulative %	Total	% of Variance	Cumulative %
1	3,008	60,160	60,160	3,008	60,160	60,160
2	,629	12,584	72,745			
3	,591	11,815	84,560			
4	,462	9,233	93,793			
5	,310	6,207	100,000			

Extraction Method: Principal Component Analysis.

Component Matrix[a]

	Component
	1
ATP01	,876
ATP02	,795
ATP03	,722
ATP04	,699
ATP05	,774

Extraction Method: Principal Component Analysis.

a. 1 components extracted.

4. Variabel *Willingness to Pay*

KMO and Bartlett's Test

Kaiser-Meyer-Olkin Measure of Sampling Adequacy.		,878
Bartlett's Test of Sphericity	Approx. Chi-Square	522,087
	df	10
	Sig.	,000

Communalities

	Initial	Extraction
WP01	1,000	,729
WP02	1,000	,772
WP03	1,000	,687
WP04	1,000	,615
WP05	1,000	,651

Extraction Method: Principal Component Analysis.

Total Variance Explained

Component	Initial Eigenvalues			Extraction Sums of Squared Loadings		
	Total	% of Variance	Cumulative %	Total	% of Variance	Cumulative %
1	3,454	69,083	69,083	3,454	69,083	69,083
2	,492	9,834	78,917			
3	,423	8,454	87,371			
4	,360	7,197	94,568			
5	,272	5,432	100,000			

Extraction Method: Principal Component Analysis.

Component Matrix[a]

	Component
	1
WP01	,854
WP02	,879
WP03	,829
WP04	,784
WP05	,807

Extraction Method: Principal Component Analysis.
a. 1 components extracted.

LAMPIRAN 3

Perceived Value

Case Processing Summary

		N	%
Cases	Valid	200	100,0
	Excluded[a]	0	,0
	Total	200	100,0

a. Listwise deletion based on all variables in the procedure.

Reliability Statistics

Cronbach's Alpha	N of Items
,915	6

Item-Total Statistics

	Scale Mean if Item Deleted	Scale Variance if Item Deleted	Corrected Item-Total Correlation	Cronbach's Alpha if Item Deleted
PV01	23,92	17,475	,785	,897
PV02	24,00	17,397	,732	,904
PV03	24,22	17,047	,764	,899
PV04	23,93	16,281	,772	,899
PV05	24,04	17,501	,707	,907
PV06	23,93	17,643	,829	,893

Free Mentality

Case Processing Summary

		N	%
Cases	Valid	200	100,0
	Excluded[a]	0	,0
	Total	200	100,0

a. Listwise deletion based on all variables in the procedure.

Reliability Statistics

Cronbach's Alpha	N of Items
,827	3

Item-Total Statistics

	Scale Mean if Item Deleted	Scale Variance if Item Deleted	Corrected Item-Total Correlation	Cronbach's Alpha if Item Deleted
FM01	4,89	4,444	,737	,710
FM02	4,56	4,640	,653	,793
FM03	4,59	4,535	,666	,780

Attitude toward Paying

Case Processing Summary

		N	%
Cases	Valid	200	100,0
	Excluded[a]	0	,0
	Total	200	100,0

a. Listwise deletion based on all variables in the procedure.

Reliability Statistics

Cronbach's Alpha	N of Items
,829	5

Item-Total Statistics

	Scale Mean if Item Deleted	Scale Variance if Item Deleted	Corrected Item-Total Correlation	Cronbach's Alpha if Item Deleted
ATP01	19,35	8,411	,769	,754
ATP02	19,48	9,186	,652	,789
ATP03	19,38	9,271	,567	,811
ATP04	19,51	8,965	,542	,820
ATP05	19,60	8,543	,622	,796

Willingness to Pay

Case Processing Summary

		N	%
Cases	Valid	200	100,0
	Excluded[a]	0	,0
	Total	200	100,0

a. Listwise deletion based on all variables in the procedure.

Reliability Statistics

Cronbach's Alpha	N of Items
,885	5

Item-Total Statistics

	Scale Mean if Item Deleted	Scale Variance if Item Deleted	Corrected Item-Total Correlation	Cronbach's Alpha if Item Deleted
WP01	19,82	10,731	,759	,853
WP02	19,77	11,347	,793	,846
WP03	19,71	11,602	,722	,861
WP04	19,75	12,410	,666	,874
WP05	19,91	10,886	,698	,869

LAMPIRAN 4

Confirmatory Factor Analisys

Perceived Value

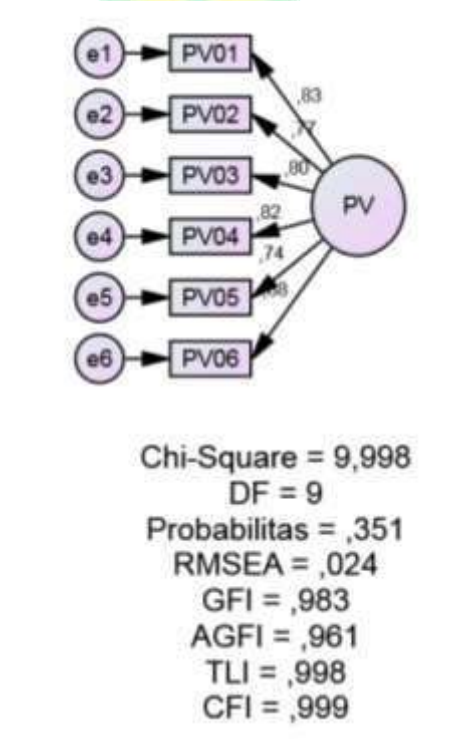

Model Fit Summary

CMIN

Model	NPAR	CMIN	DF	P	CMIN/DF
Default model	12	9,998	9	,351	1,111
Saturated model	21	,000	0		
Independence model	6	783,374	15	,000	52,225

RMR, GFI

Model	RMR	GFI	AGFI	PGFI
Default model	,018	,983	,961	,421
Saturated model	,000	1,000		
Independence model	,524	,321	,049	,229

Baseline Comparisons

Model	NFI Delta1	RFI rho1	IFI Delta2	TLI rho2	CFI
Default model	,987	,979	,999	,998	,999
Saturated model	1,000		1,000		1,000
Independence model	,000	,000	,000	,000	,000

Parsimony-Adjusted Measures

Model	PRATIO	PNFI	PCFI
Default model	,600	,592	,599
Saturated model	,000	,000	,000
Independence model	1,000	,000	,000

NCP

Model	NCP	LO 90	HI 90
Default model	,998	,000	13,033
Saturated model	,000	,000	,000
Independence model	768,374	680,400	863,745

FMIN

Model	FMIN	F0	LO 90	HI 90
Default model	,050	,005	,000	,065
Saturated model	,000	,000	,000	,000
Independence model	3,937	3,861	3,419	4,340

RMSEA

Model	RMSEA	LO 90	HI 90	PCLOSE
Default model	,024	,000	,085	,688
Independence model	,507	,477	,538	,000

AIC

Model	AIC	BCC	BIC	CAIC
Default model	33,998	34,873	73,578	85,578
Saturated model	42,000	43,531	111,265	132,265
Independence model	795,374	795,811	815,164	821,164

ECVI

Model	ECVI	LO 90	HI 90	MECVI
Default model	,171	,166	,231	,175
Saturated model	,211	,211	,211	,219
Independence model	3,997	3,555	4,476	3,999

HOELTER

Model	HOELTER .05	HOELTER .01
Default model	337	432
Independence model	7	8

Free Mentality

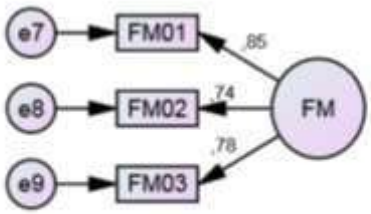

Chi-Square = 1,355
DF = 1
Probabilitas = ,244
RMSEA = ,042
GFI = ,995
AGFI = ,973
TLI = ,995
CFI = ,998

Model Fit Summary

CMIN

Model	NPAR	CMIN	DF	P	CMIN/DF
Default model	5	1,355	1	,244	1,355
Saturated model	6	,000	0		
Independence model	3	227,415	3	,000	75,805

RMR, GFI

Model	RMR	GFI	AGFI	PGFI
Default model	,044	,995	,973	,166
Saturated model	,000	1,000		
Independence model	,609	,567	,135	,284

Baseline Comparisons

Model	NFI Delta1	RFI rho1	IFI Delta2	TLI rho2	CFI
Default model	,994	,982	,998	,995	,998
Saturated model	1,000		1,000		1,000
Independence model	,000	,000	,000	,000	,000

Parsimony-Adjusted Measures

Model	PRATIO	PNFI	PCFI
Default model	,333	,331	,333
Saturated model	,000	,000	,000
Independence model	1,000	,000	,000

NCP

Model	NCP	LO 90	HI 90
Default model	,355	,000	7,889
Saturated model	,000	,000	,000
Independence model	224,415	178,619	277,623

FMIN

Model	FMIN	F0	LO 90	HI 90
Default model	,007	,002	,000	,040
Saturated model	,000	,000	,000	,000
Independence model	1,143	1,128	,898	1,395

RMSEA

Model	RMSEA	LO 90	HI 90	PCLOSE
Default model	,042	,000	,199	,354
Independence model	,613	,547	,682	,000

AIC

Model	AIC	BCC	BIC	CAIC
Default model	11,355	11,561	27,847	32,847
Saturated model	12,000	12,246	31,790	37,790
Independence model	233,415	233,538	243,310	246,310

ECVI

Model	ECVI	LO 90	HI 90	MECVI
Default model	,057	,055	,095	,058
Saturated model	,060	,060	,060	,062
Independence model	1,173	,943	1,440	1,174

HOELTER

Model	HOELTER .05	HOELTER .01
Default model	564	975
Independence model	7	10

Attitude toward Paying

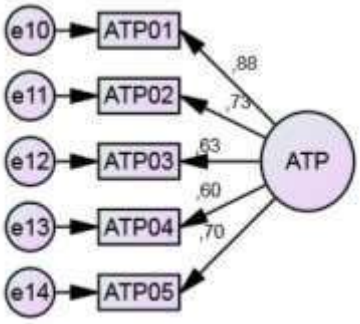

Chi-Square = 1,371
DF = 5
Probabilitas = ,927
RMSEA = ,000
GFI = ,997
AGFI = ,992
TLI = 1,020
CFI = 1,000

Model Fit Summary

CMIN

Model	NPAR	CMIN	DF	P	CMIN/DF
Default model	10	1,371	5	,927	,274
Saturated model	15	,000	0		
Independence model	5	364,433	10	,000	36,443

RMR, GFI

Model	RMR	GFI	AGFI	PGFI
Default model	,011	,997	,992	,332
Saturated model	,000	1,000		
Independence model	,362	,495	,242	,330

Baseline Comparisons

Model	NFI Delta1	RFI rho1	IFI Delta2	TLI rho2	CFI
Default model	,996	,992	1,010	1,020	1,000
Saturated model	1,000		1,000		1,000
Independence model	,000	,000	,000	,000	,000

Parsimony-Adjusted Measures

Model	PRATIO	PNFI	PCFI
Default model	,500	,498	,500
Saturated model	,000	,000	,000
Independence model	1,000	,000	,000

NCP

Model	NCP	LO 90	HI 90
Default model	,000	,000	,913
Saturated model	,000	,000	,000
Independence model	354,433	295,726	420,557

FMIN

Model	FMIN	F0	LO 90	HI 90
Default model	,007	,000	,000	,005
Saturated model	,000	,000	,000	,000
Independence model	1,831	1,781	1,486	2,113

RMSEA

Model	RMSEA	LO 90	HI 90	PCLOSE
Default model	,000	,000	,030	,974
Independence model	,422	,385	,460	,000

AIC

Model	AIC	BCC	BIC	CAIC
Default model	21,371	21,993	54,354	64,354
Saturated model	30,000	30,933	79,475	94,475
Independence model	374,433	374,744	390,924	395,924

ECVI

Model	ECVI	LO 90	HI 90	MECVI
Default model	,107	,126	,130	,111
Saturated model	,151	,151	,151	,155
Independence model	1,882	1,587	2,214	1,883

HOELTER

Model	HOELTER .05	HOELTER .01
Default model	1608	2191
Independence model	10	13

Willingness to Pay

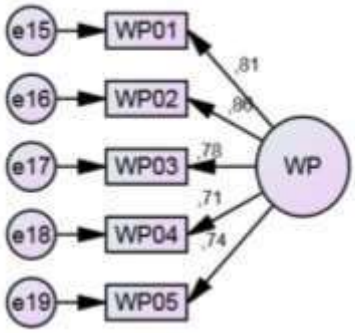

Chi-Square = 4,537
DF = 5
Probabilitas = ,475
RMSEA = ,000
GFI = ,991
AGFI = ,974
TLI = 1,002
CFI = 1,000

Model Fit Summary

CMIN

Model	NPAR	CMIN	DF	P	CMIN/DF
Default model	10	4,537	5	,475	,907
Saturated model	15	,000	0		
Independence model	5	528,729	10	,000	52,873

RMR, GFI

Model	RMR	GFI	AGFI	PGFI
Default model	,015	,991	,974	,330
Saturated model	,000	1,000		
Independence model	,504	,398	,097	,266

Baseline Comparisons

Model	NFI Delta1	RFI rho1	IFI Delta2	TLI rho2	CFI
Default model	,991	,983	1,001	1,002	1,000
Saturated model	1,000		1,000		1,000
Independence model	,000	,000	,000	,000	,000

Parsimony-Adjusted Measures

Model	PRATIO	PNFI	PCFI
Default model	,500	,496	,500
Saturated model	,000	,000	,000
Independence model	1,000	,000	,000

NCP

Model	NCP	LO 90	HI 90
Default model	,000	,000	8,758
Saturated model	,000	,000	,000
Independence model	518,729	447,105	597,760

FMIN

Model	FMIN	F0	LO 90	HI 90
Default model	,023	,000	,000	,044
Saturated model	,000	,000	,000	,000
Independence model	2,657	2,607	2,247	3,004

RMSEA

Model	RMSEA	LO 90	HI 90	PCLOSE
Default model	,000	,000	,094	,714
Independence model	,511	,474	,548	,000

AIC

Model	AIC	BCC	BIC	CAIC
Default model	24,537	25,159	57,520	67,520
Saturated model	30,000	30,933	79,475	94,475
Independence model	538,729	539,040	555,221	560,221

ECVI

Model	ECVI	LO 90	HI 90	MECVI
Default model	,123	,126	,170	,126
Saturated model	,151	,151	,151	,155
Independence model	2,707	2,347	3,104	2,709

HOELTER

Model	HOELTER .05	HOELTER .01
Default model	486	662
Independence model	7	9

LAMPIRAN 5

Full Model

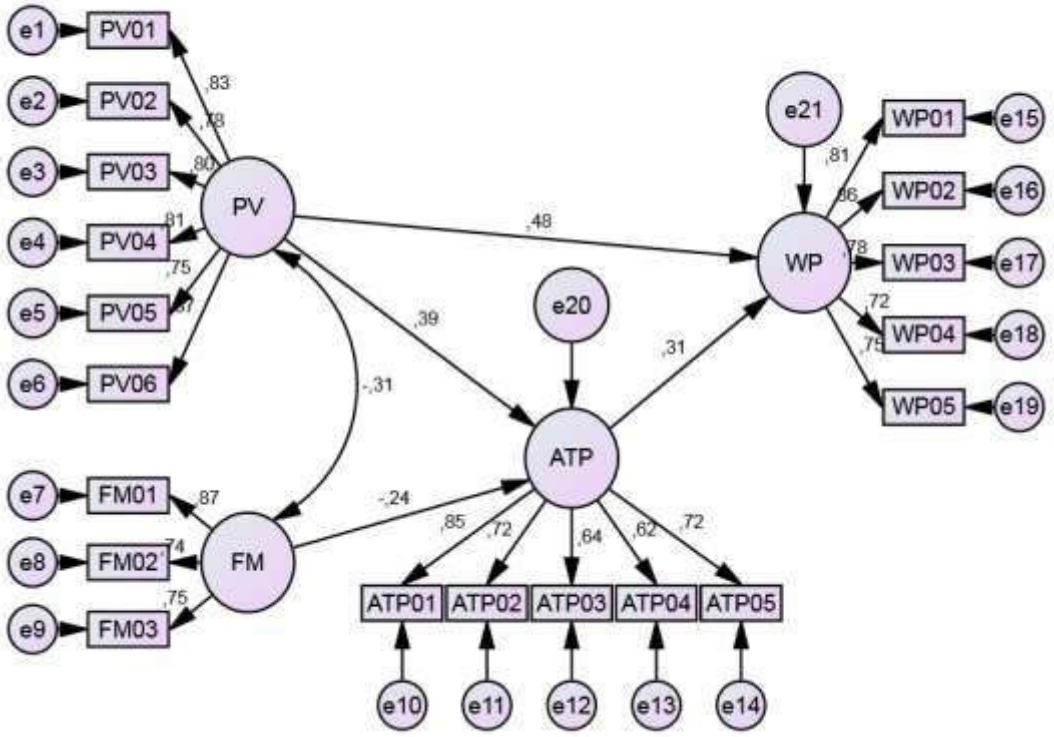

Chi-Square = 213,559
DF = 147
Probabilitas = ,000
RMSEA = ,048
GFI = ,904
AGFI = ,876
TLI = ,963
CFI = ,968

Model Fit Summary

CMIN

Model	NPAR	CMIN	DF	P	CMIN/DF
Default model	43	213,559	147	,000	1,453
Saturated model	190	,000	0		
Independence model	19	2252,565	171	,000	13,173

RMR, GFI

Model	RMR	GFI	AGFI	PGFI
Default model	,102	,904	,876	,699
Saturated model	,000	1,000		
Independence model	,385	,257	,174	,231

Baseline Comparisons

Model	NFI Delta1	RFI rho1	IFI Delta2	TLI rho2	CFI
Default model	,905	,890	,968	,963	,968
Saturated model	1,000		1,000		1,000
Independence model	,000	,000	,000	,000	,000

Parsimony-Adjusted Measures

Model	PRATIO	PNFI	PCFI
Default model	,860	,778	,832
Saturated model	,000	,000	,000
Independence model	1,000	,000	,000

NCP

Model	NCP	LO 90	HI 90
Default model	66,559	31,579	109,541
Saturated model	,000	,000	,000
Independence model	2081,565	1932,061	2238,446

FMIN

Model	FMIN	F0	LO 90	HI 90
Default model	1,073	,334	,159	,550
Saturated model	,000	,000	,000	,000
Independence model	11,319	10,460	9,709	11,248

RMSEA

Model	RMSEA	LO 90	HI 90	PCLOSE
Default model	,048	,033	,061	,595
Independence model	,247	,238	,256	,000

AIC

Model	AIC	BCC	BIC	CAIC
Default model	299,559	309,168	441,387	484,387
Saturated model	380,000	422,458	1006,680	1196,680
Independence model	2290,565	2294,811	2353,233	2372,233

ECVI

Model	ECVI	LO 90	HI 90	MECVI
Default model	1,505	1,330	1,721	1,554
Saturated model	1,910	1,910	1,910	2,123
Independence model	11,510	10,759	12,299	11,532

HOELTER

Model	HOELTER .05	HOELTER .01
Default model	165	177
Independence model	18	20

UNIVERSITAS NEGERI JAKARTA

LAMPIRAN 6

Fit Model

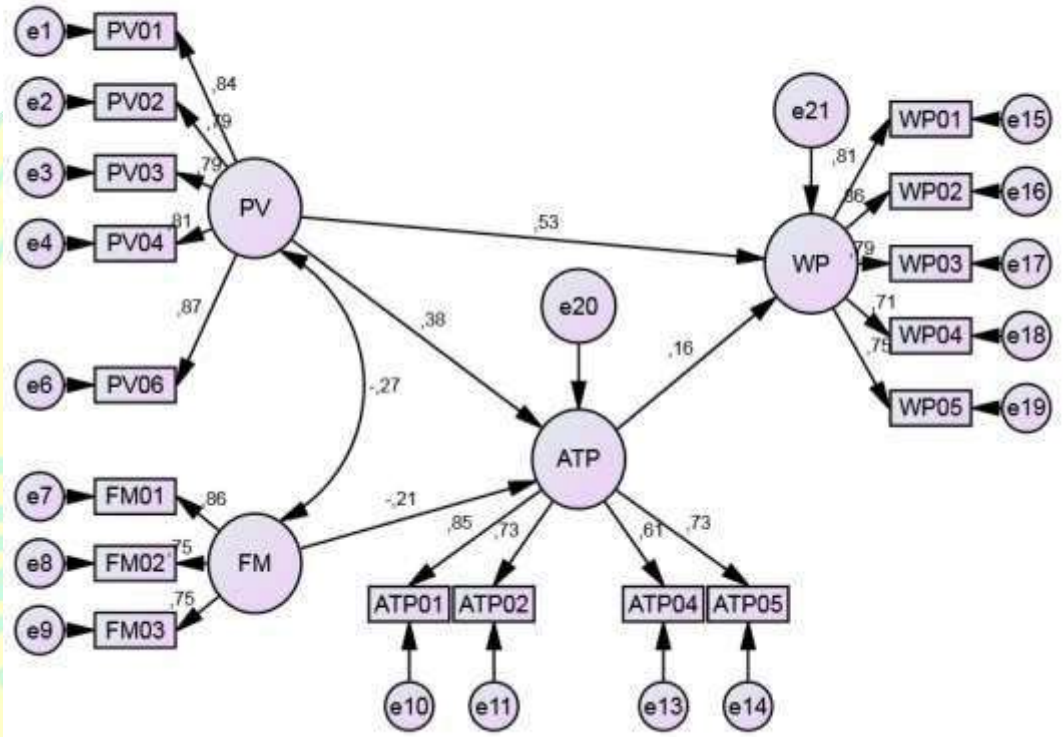

Chi-Square = 100,959
DF = 113
Probabilitas = ,784
RMSEA = ,000
GFI = ,946
AGFI = ,927
TLI = 1,008
CFI = 1,000

Model Fit Summary

CMIN

Model	NPAR	CMIN	DF	P	CMIN/DF
Default model	40	100,959	113	,784	,893
Saturated model	153	,000	0		
Independence model	17	1977,413	136	,000	14,540

RMR, GFI

Model	RMR	GFI	AGFI	PGFI
Default model	,045	,946	,927	,699
Saturated model	,000	1,000		
Independence model	,390	,278	,187	,247

Baseline Comparisons

Model	NFI Delta1	RFI rho1	IFI Delta2	TLI rho2	CFI
Default model	,949	,939	1,006	1,008	1,000
Saturated model	1,000		1,000		1,000
Independence model	,000	,000	,000	,000	,000

Parsimony-Adjusted Measures

Model	PRATIO	PNFI	PCFI
Default model	,831	,788	,831
Saturated model	,000	,000	,000
Independence model	1,000	,000	,000

NCP

Model	NCP	LO 90	HI 90
Default model	,000	,000	14,340
Saturated model	,000	,000	,000
Independence model	1841,413	1701,309	1988,902

FMIN

Model	FMIN	F0	LO 90	HI 90
Default model	,507	,000	,000	,072
Saturated model	,000	,000	,000	,000
Independence model	9,937	9,253	8,549	9,994

RMSEA

Model	RMSEA	LO 90	HI 90	PCLOSE
Default model	,000	,000	,025	1,000
Independence model	,261	,251	,271	,000

AIC

Model	AIC	BCC	BIC	CAIC
Default model	180,959	188,915	312,892	352,892
Saturated model	306,000	336,431	810,643	963,643
Independence model	2011,413	2014,794	2067,484	2084,484

ECVI

Model	ECVI	LO 90	HI 90	MECVI
Default model	,909	,970	1,042	,949
Saturated model	1,538	1,538	1,538	1,691
Independence model	10,108	9,404	10,849	10,125

HOELTER

Model	HOELTER .05	HOELTER .01
Default model	274	298
Independence model	17	18

Estimates (Group number 1 - Default model) Scalar

Estimates (Group number 1 - Default model)

Maximum Likelihood Estimates

Regression Weights: (Group number 1 - Default model)

			Estimate	S.E.	C.R.	P	Label
ATP	<---	PV	,384	,080	4,785	***	
ATP	<---	FM	-,166	,063	-2,642	,008	
WP	<---	ATP	,179	,075	2,381	,017	
WP	<---	PV	,599	,090	6,673	***	
PV01	<---	PV	1,000				
PV02	<---	PV	1,011	,078	13,032	***	
PV03	<---	PV	1,023	,079	12,905	***	
PV04	<---	PV	1,165	,086	13,571	***	
PV06	<---	PV	,973	,065	15,038	***	
FM01	<---	FM	1,000				
FM02	<---	FM	,897	,082	10,998	***	
FM03	<---	FM	,907	,083	10,988	***	
ATP01	<---	ATP	1,000				
ATP02	<---	ATP	,804	,077	10,429	***	
ATP04	<---	ATP	,802	,094	8,570	***	
ATP05	<---	ATP	,966	,092	10,488	***	
WP01	<---	WP	1,000				
WP02	<---	WP	,926	,067	13,883	***	
WP03	<---	WP	,866	,070	12,329	***	
WP04	<---	WP	,708	,066	10,764	***	
WP05	<---	WP	,957	,082	11,599	***	

Standardized Regression Weights: (Group number 1 - Default model)

			Estimate
ATP	<---	PV	,382
ATP	<---	FM	-,213
WP	<---	ATP	,157
WP	<---	PV	,525
PV01	<---	PV	,835
PV02	<---	PV	,791
PV03	<---	PV	,786

			Estimate
PV04	<---	PV	,813
PV06	<---	PV	,871
FM01	<---	FM	,858
FM02	<---	FM	,752
FM03	<---	FM	,751
ATP01	<---	ATP	,851
ATP02	<---	ATP	,729
ATP04	<---	ATP	,611
ATP05	<---	ATP	,733
WP01	<---	WP	,810
WP02	<---	WP	,860
WP03	<---	WP	,786
WP04	<---	WP	,708
WP05	<---	WP	,751

Covariances: (Group number 1 - Default model)

			Estimate	S.E.	C.R.	P	Label
PV	<-->	FM	-,205	,065	-3,183	,001	
e21	<-->	FM	-,440	,071	-6,180	***	

Correlations: (Group number 1 - Default model)

			Estimate
PV	<-->	FM	-,269
e21	<-->	FM	-,654

Variances: (Group number 1 - Default model)

	Estimate	S.E.	C.R.	P	Label
PV	,592	,083	7,090	***	
FM	,989	,142	6,947	***	
e20	,457	,071	6,457	***	
e21	,457	,073	6,226	***	
e1	,256	,033	7,868	***	
e2	,362	,043	8,461	***	
e3	,384	,045	8,515	***	
e4	,412	,050	8,203	***	
e6	,179	,025	7,110	***	
e7	,354	,068	5,194	***	

	Estimate	S.E.	C.R.	P	Label
e8	,613	,080	7,690	***	
e9	,630	,082	7,700	***	
e10	,227	,043	5,279	***	
e11	,341	,043	7,894	***	
e13	,644	,072	8,923	***	
e14	,480	,061	7,840	***	
e15	,403	,050	8,072	***	
e16	,233	,033	7,149	***	
e17	,357	,043	8,367	***	
e18	,384	,043	8,984	***	
e19	,546	,063	8,699	***	

Matrices (Group number 1 - Default model)

Factor Score Weights (Group number 1 - Default model)

	WPP05	WPP04	WPP03	WPP02	WPP01	ATP05	ATP04	ATP02	ATP01	FMM03	FMM02	FMM01	FMM06	FMM04	FMM03	FMV02	FMV01
FM	-,030	-,032	-,042	-,068	-,043	-,002	-,001	-,003	-,005	,198	,201	,388	,013	,007	,007	,007	,010
PV	,009	,010	,013	,021	,013	,005	,003	,006	,011	,004	,004	,007	,063	,037	,029	,035	,189
ATP	,008	,008	,011	,018	,011	,175	,108	,205	,382	-,002	-,002	-,003	,014	,007	,007	,007	,010
WP	,120	,266	,662	,723	,700	,009	,006	,110	,200	-,022	-,022	-,044	,029	,015	,014	,015	,021

UNIVERSITAS NEGERI JAKARTA

Total Effects (Group number 1 - Default model)

	FM	PV	ATP	WP
ATP	-,166	,384	,000	,000
WP	-,030	,668	,179	,000
WP05	-,028	,639	,171	,957
WP04	-,021	,473	,126	,708
WP03	-,026	,578	,155	,866
WP02	-,027	,618	,165	,926
WP01	-,030	,668	,179	1,000
ATP05	-,160	,371	,966	,000
ATP04	-,133	,308	,802	,000
ATP02	-,133	,309	,804	,000
ATP01	-,166	,384	1,000	,000
FM03	,907	,000	,000	,000
FM02	,897	,000	,000	,000
FM01	1,000	,000	,000	,000
PV06	,000	,973	,000	,000
PV04	,000	1,165	,000	,000
PV03	,000	1,023	,000	,000
PV02	,000	1,011	,000	,000
PV01	,000	1,000	,000	,000

Standardized Total Effects (Group number 1 - Default model)

	FM	PV	ATP	WP
ATP	-,213	,382	,000	,000
WP	-,033	,585	,157	,000
WP05	-,025	,439	,118	,751
WP04	-,024	,414	,111	,708
WP03	-,026	,460	,124	,786
WP02	-,029	,503	,135	,860
WP01	-,027	,474	,127	,810
ATP05	-,156	,280	,733	,000
ATP04	-,130	,233	,611	,000
ATP02	-,155	,278	,729	,000
ATP01	-,181	,325	,851	,000
FM03	,751	,000	,000	,000
FM02	,752	,000	,000	,000
FM01	,858	,000	,000	,000

	FM	PV	ATP	WP
PV06	,000	,871	,000	,000
PV04	,000	,813	,000	,000
PV03	,000	,786	,000	,000
PV02	,000	,791	,000	,000
PV01	,000	,835	,000	,000

Direct Effects (Group number 1 - Default model)

	FM	PV	ATP	WP
ATP	-,166	,384	,000	,000
WP	,000	,599	,179	,000
WP05	,000	,000	,000	,957
WP04	,000	,000	,000	,708
WP03	,000	,000	,000	,866
WP02	,000	,000	,000	,926
WP01	,000	,000	,000	1,000
ATP05	,000	,000	,966	,000
ATP04	,000	,000	,802	,000
ATP02	,000	,000	,804	,000
ATP01	,000	,000	1,000	,000
FM03	,907	,000	,000	,000
FM02	,897	,000	,000	,000
FM01	1,000	,000	,000	,000
PV06	,000	,973	,000	,000
PV04	,000	1,165	,000	,000
PV03	,000	1,023	,000	,000
PV02	,000	1,011	,000	,000
PV01	,000	1,000	,000	,000

Standardized Direct Effects (Group number 1 - Default model)

	FM	PV	ATP	WP
ATP	-,213	,382	,000	,000
WP	,000	,525	,157	,000
WP05	,000	,000	,000	,751
WP04	,000	,000	,000	,708
WP03	,000	,000	,000	,786
WP02	,000	,000	,000	,860
WP01	,000	,000	,000	,810

	FM	PV	ATP	WP
ATP05	,000	,000	,733	,000
ATP04	,000	,000	,611	,000
ATP02	,000	,000	,729	,000
ATP01	,000	,000	,851	,000
FM03	,751	,000	,000	,000
FM02	,752	,000	,000	,000
FM01	,858	,000	,000	,000
PV06	,000	,871	,000	,000
PV04	,000	,813	,000	,000
PV03	,000	,786	,000	,000
PV02	,000	,791	,000	,000
PV01	,000	,835	,000	,000

Indirect Effects (Group number 1 - Default model)

	FM	PV	ATP	WP
ATP	,000	,000	,000	,000
WP	-,030	,068	,000	,000
WP05	-,028	,639	,171	,000
WP04	-,021	,473	,126	,000
WP03	-,026	,578	,155	,000
WP02	-,027	,618	,165	,000
WP01	-,030	,668	,179	,000
ATP05	-,160	,371	,000	,000
ATP04	-,133	,308	,000	,000
ATP02	-,133	,309	,000	,000
ATP01	-,166	,384	,000	,000
FM03	,000	,000	,000	,000
FM02	,000	,000	,000	,000
FM01	,000	,000	,000	,000
PV06	,000	,000	,000	,000
PV04	,000	,000	,000	,000
PV03	,000	,000	,000	,000
PV02	,000	,000	,000	,000
PV01	,000	,000	,000	,000

Standardized Indirect Effects (Group number 1 - Default model)

	FM	PV	ATP	WP
ATP	,000	,000	,000	,000
WP	-,033	,060	,000	,000
WP05	-,025	,439	,118	,000
WP04	-,024	,414	,111	,000
WP03	-,026	,460	,124	,000
WP02	-,029	,503	,135	,000
WP01	-,027	,474	,127	,000
ATP05	-,156	,280	,000	,000
ATP04	-,130	,233	,000	,000
ATP02	-,155	,278	,000	,000
ATP01	-,181	,325	,000	,000
FM03	,000	,000	,000	,000
FM02	,000	,000	,000	,000
FM01	,000	,000	,000	,000
PV06	,000	,000	,000	,000
PV04	,000	,000	,000	,000
PV03	,000	,000	,000	,000
PV02	,000	,000	,000	,000
PV01	,000	,000	,000	,000

RIWAYAT HIDUP

Bayu Ajie Wichaksono, lahir di Jakarta, 07 Juli 1995. Peneliti merupakan anak kedua dari 2 (dua) bersaudara. Peneliti saat ini tinggal bersama orang tua di Perumahan Bintara Loka Indah Blok PP4/15 Bekasi. Peneliti menempuh pendidikan di SDI Al – Fajar Bekasi, SMPN 172 Jakarta, SMAN 44 Jakarta, kuliah di Universitas Negeri Jakarta dengan jurusan Manajemen Pemasaran (Diploma 3) lulus tahun 2017 kemudian melanjutkan studi di Fakultas Ekonomi Program Studi S1 Manajemen Universitas Negeri Jakarta. Tahun 2015 peneliti pernah melakukan kerja praktik di perusahaan PT United Tractors Tbk Jakarta. Kemudian Tahun 2019 Peneliti bekerja di Accurate sebagai Digital Marketer.